Multiplexing

Note

Bandwidth utilization is the wise use of available bandwidth to achieve specific goals.

Efficiency can be achieved by multiplexing; i.e., sharing of the bandwidth between multiple users.

6-1 MULTIPLEXING

- ***Whenever the bandwidth of a medium linking two devices is greater than the bandwidth needs of the devices, the link can be shared.***
- ***Multiplexing is the set of techniques that allows the (simultaneous) transmission of multiple signals across a single data link. As data and telecommunications use increases, so does traffic.***

- **Frequency-Division Multiplexing (FDM)**
- **Wavelength-Division Multiplexing (WDM)**
- **Synchronous Time-Division Multiplexing (STDM) : TDM**
- **Statistical Time-Division Multiplexing**

Figure 6.1 *Dividing a link into channels*

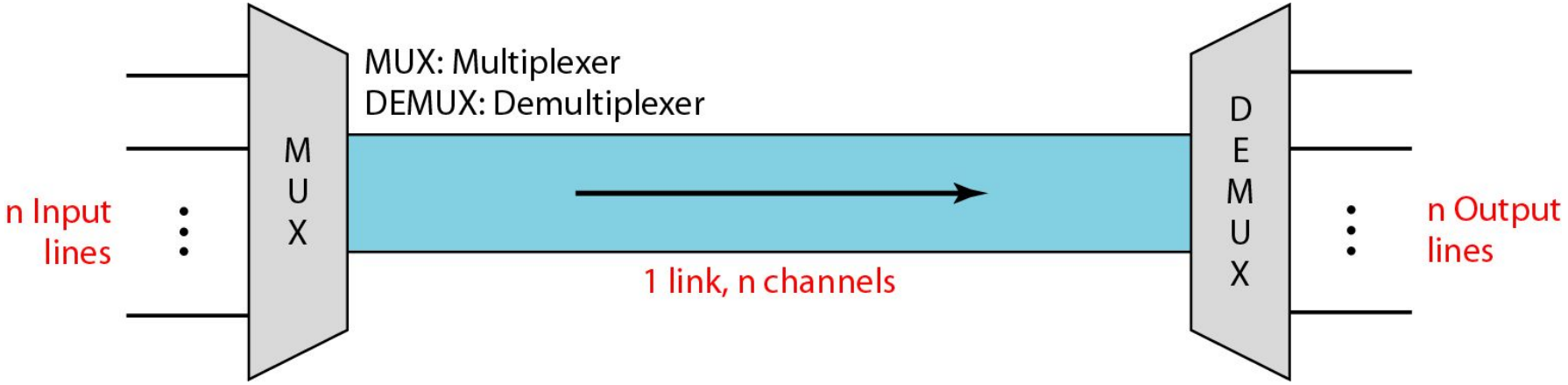

Figure 6.2 *Categories of multiplexing*

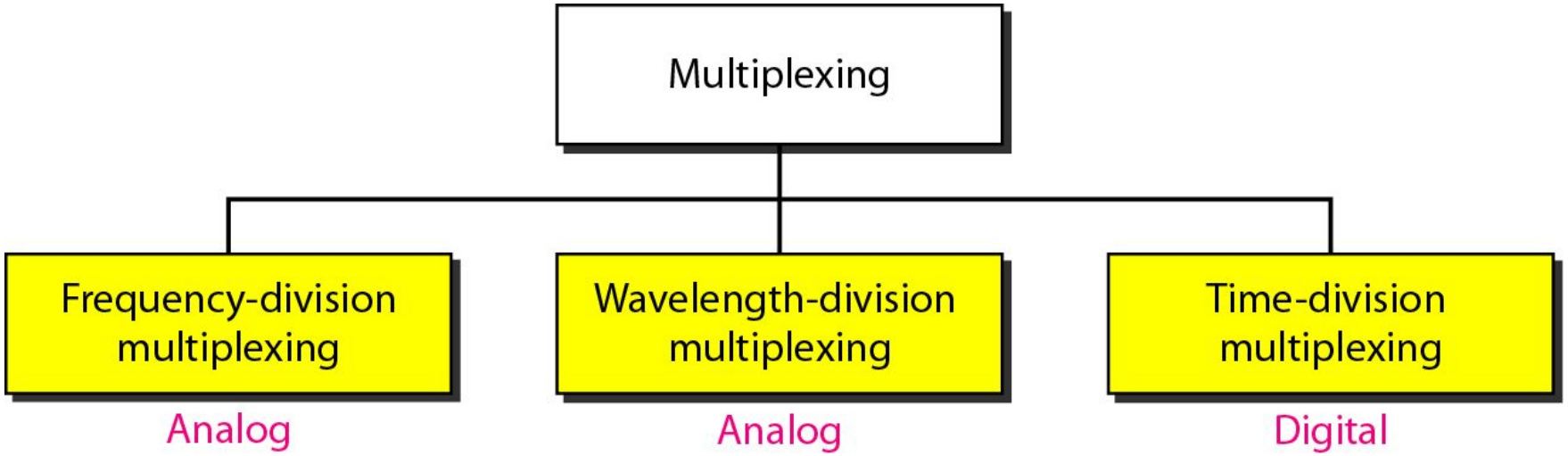

Figure 6.3 *Frequency-division multiplexing (FDM)*

Note

FDM is an analog multiplexing technique that combines analog signals.
It uses the concept of modulation discussed in last lecture.

Frequency Division Multiplexing

- FDM
- FDM is possible when the Useful bandwidth (BW) of the medium exceeds the required bandwidth of channel (BW of signals to be transmitted)
- Each signal is modulated onto a different carrier frequency
- Carrier frequencies are separated so that the signals do not overlap (guard bands). i.e. BW of signals don't overlap.
- Each modulated signal requires a certain bandwidth centered on its carrier frequency, referred to as a **channel**. To prevent interference, the channels are separated by guard bands, which are unused portions of the spectrum.
- e.g. broadcast radio
- Channel allocated even if no data

Frequency Division Multiplexing Diagram

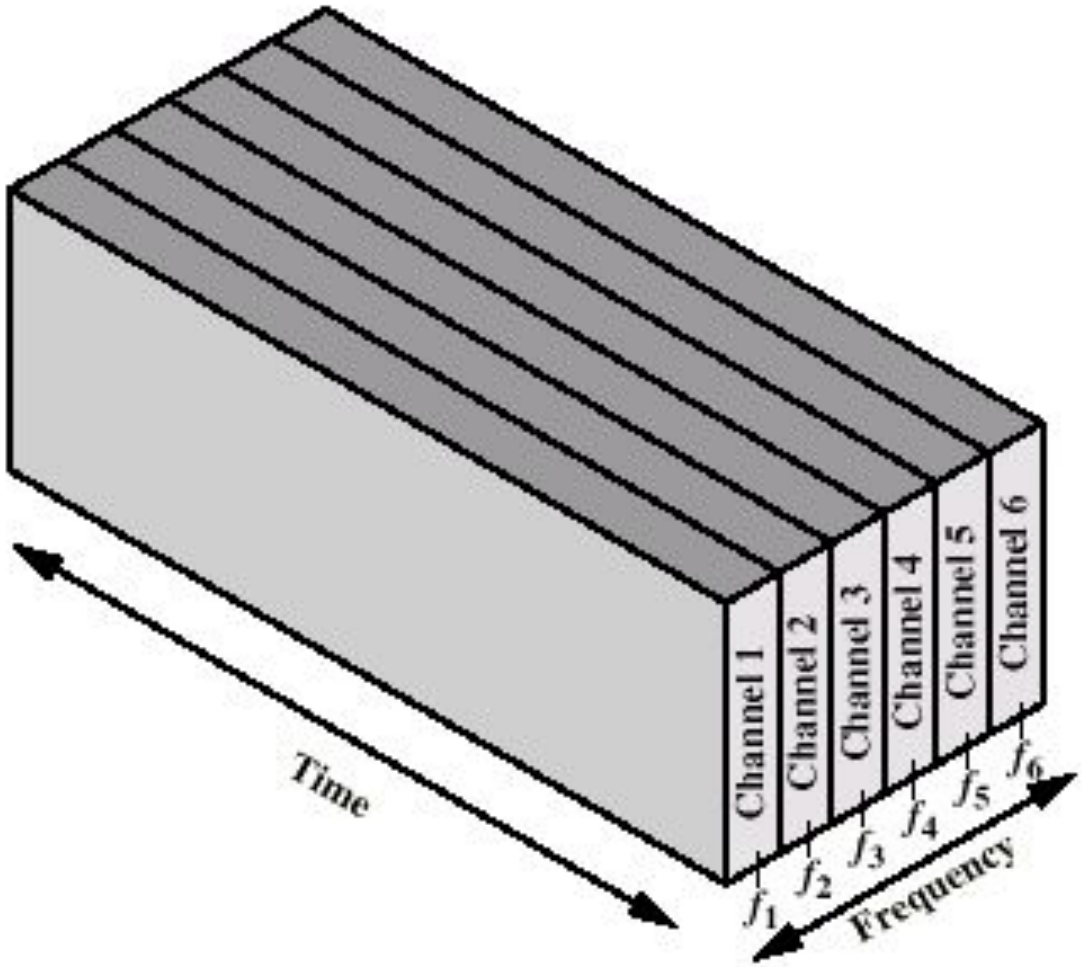

Figure 6.4 *FDM process*

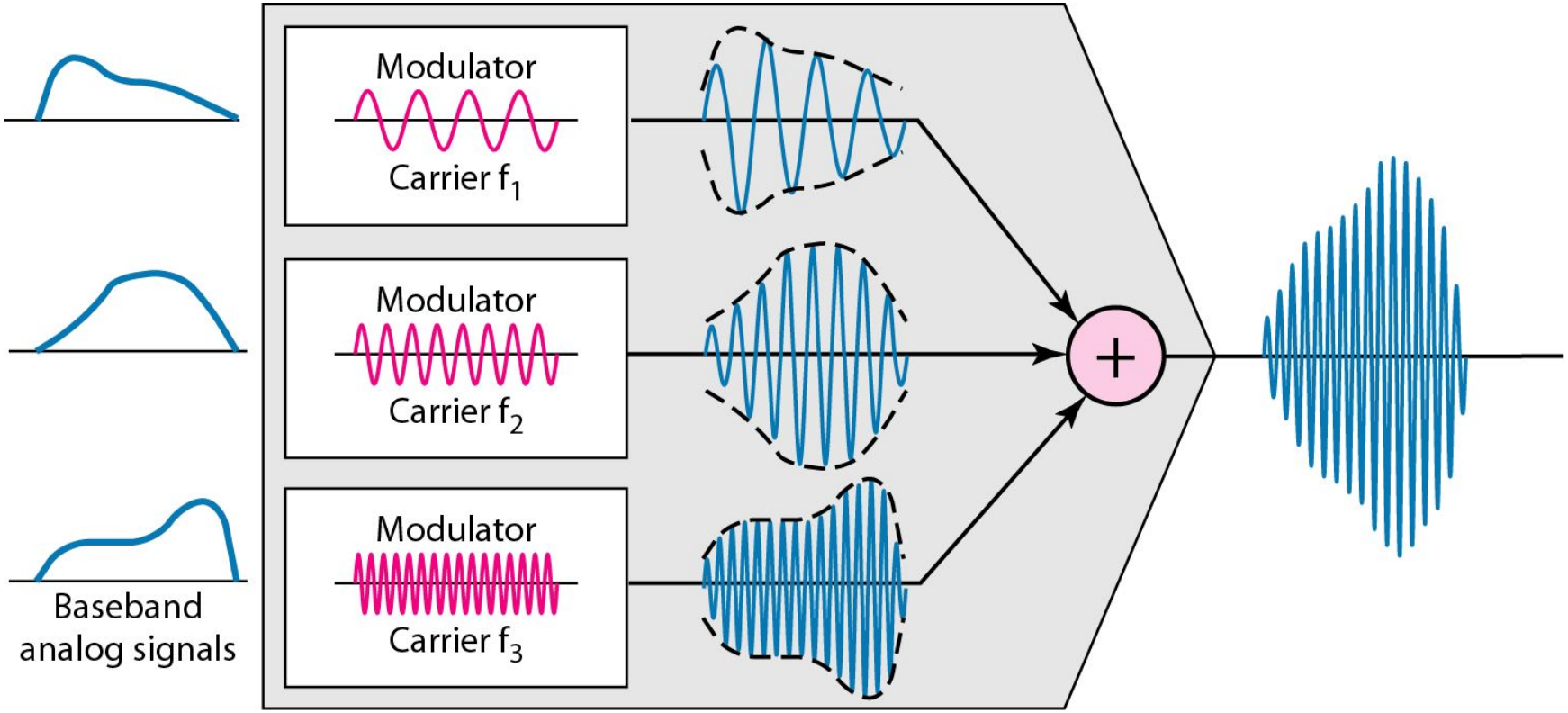

FM

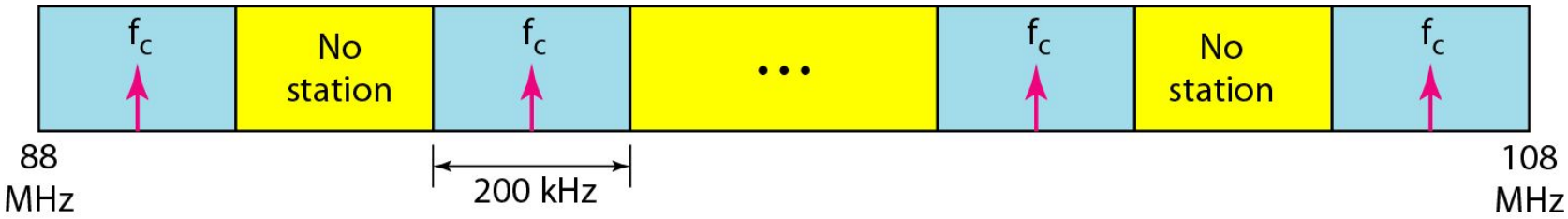

Figure 6.5 *FDM demultiplexing example*

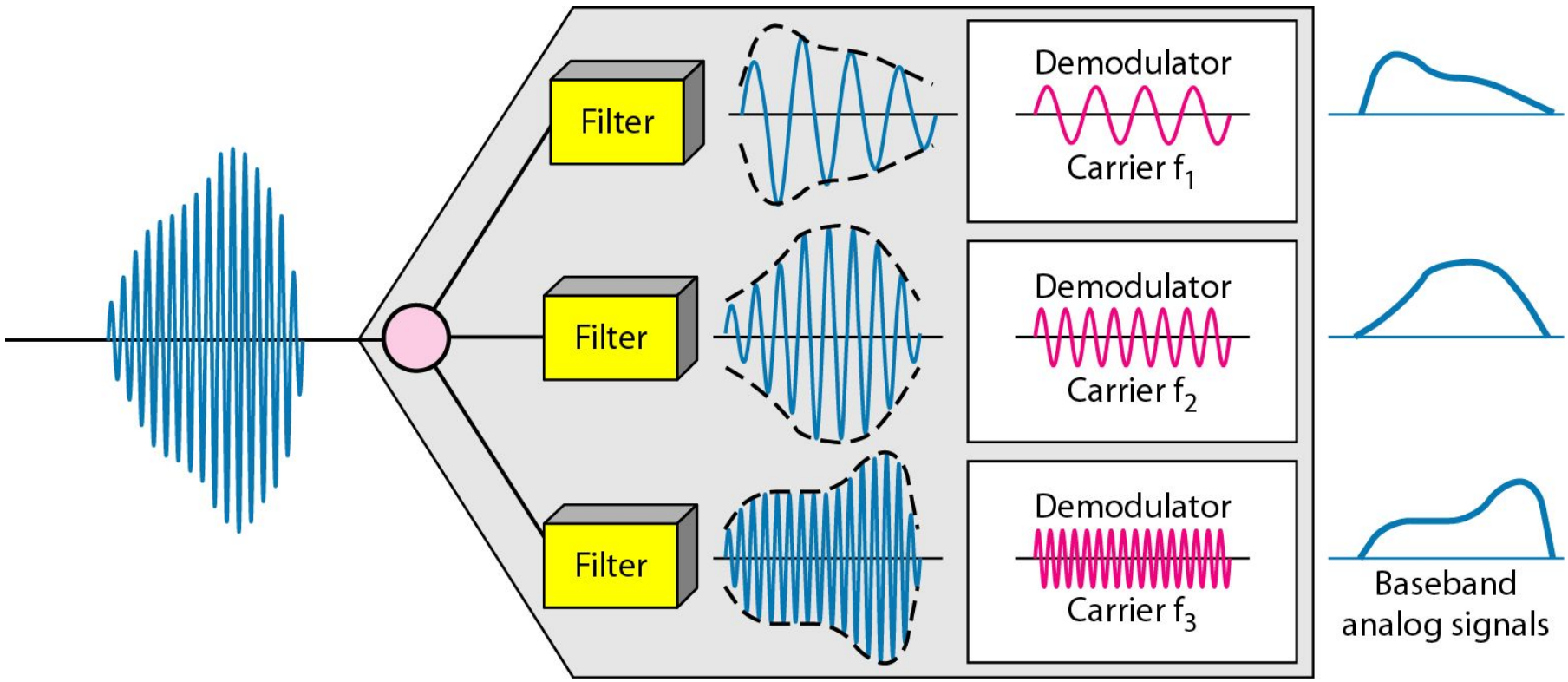

Example 6.1

Assume that a voice channel occupies a bandwidth of 4 kHz. We need to combine three voice channels into a link with a bandwidth of 12 kHz, from 20 to 32 kHz. Show the configuration, using the frequency domain. Assume there are no guard bands.

Solution

We shift (modulate) each of the three voice channels to a different bandwidth, as shown in Figure 6.6. We use the 20- to 24-kHz bandwidth for the first channel, the 24- to 28-kHz bandwidth for the second channel, and the 28- to 32-kHz bandwidth for the third one. Then we combine them as shown in Figure 6.6.

Figure 6.6 *Example 6.1*

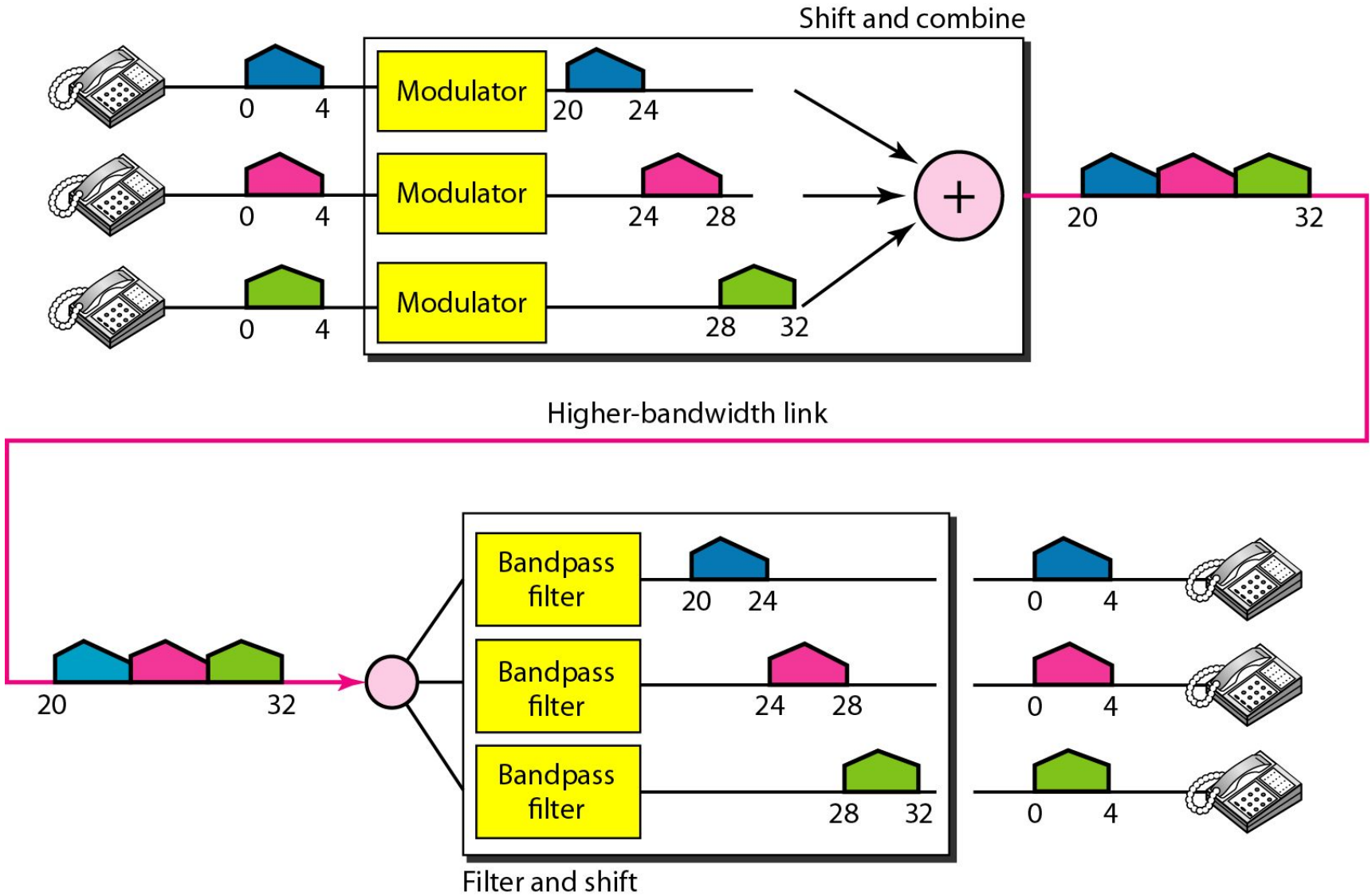

Example 6.2

Five channels, each with a 100-kHz bandwidth, are to be multiplexed together. What is the minimum bandwidth of the link if there is a need for a guard band of 10 kHz between the channels to prevent interference?

Solution

For five channels, we need at least four guard bands. This means that the required bandwidth is at least

$$5 \times 100 + 4 \times 10 = 540 \text{ kHz},$$

as shown in Figure 6.7.

Figure 6.7 *Example 6.2*

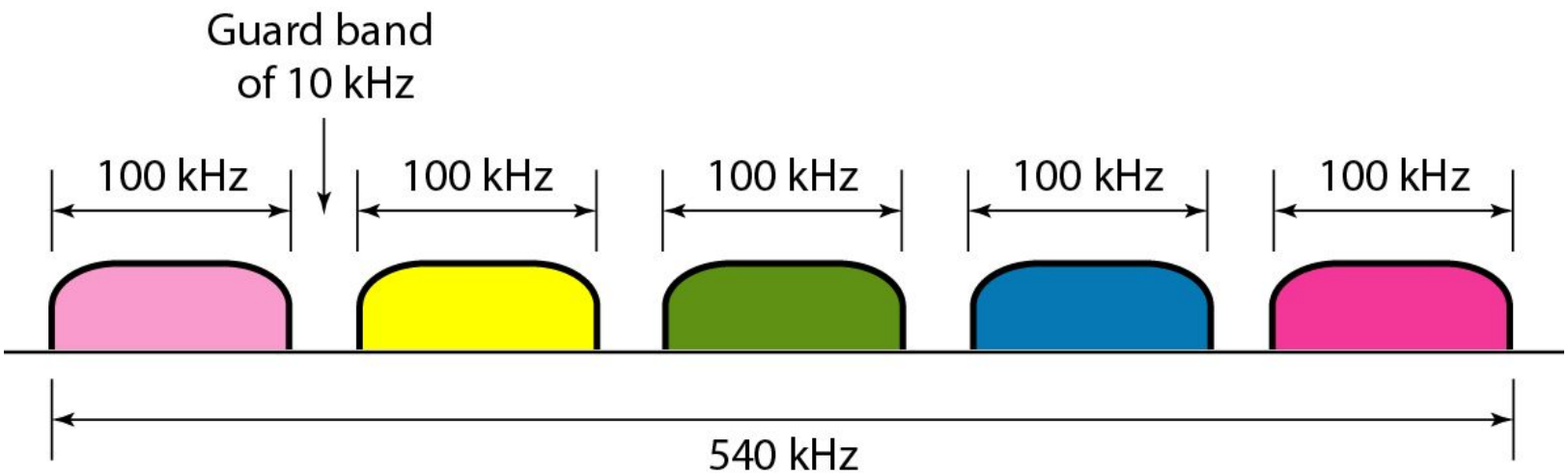

Example 6.3

Four data channels (digital), each transmitting at 1 Mbps, use a satellite channel of 1 MHz. Design an appropriate configuration, using FDM.

Solution

The satellite channel is analog. We divide it into four channels, each channel having 1M/4=250-kHz bandwidth.

Each digital channel of 1 Mbps must be transmitted over a 250KHz channel. Assuming no noise we can use Nyquist to get:

$C = 1Mbps = 2x250K \times \log_2 L \rightarrow L = 4$ ***or*** $n = 2$ ***bits/signal element.***

One solution is 4-QAM modulation. In Figure 6.8 we show a possible configuration with L = 16.

Figure 6.8 *Example 6.3*

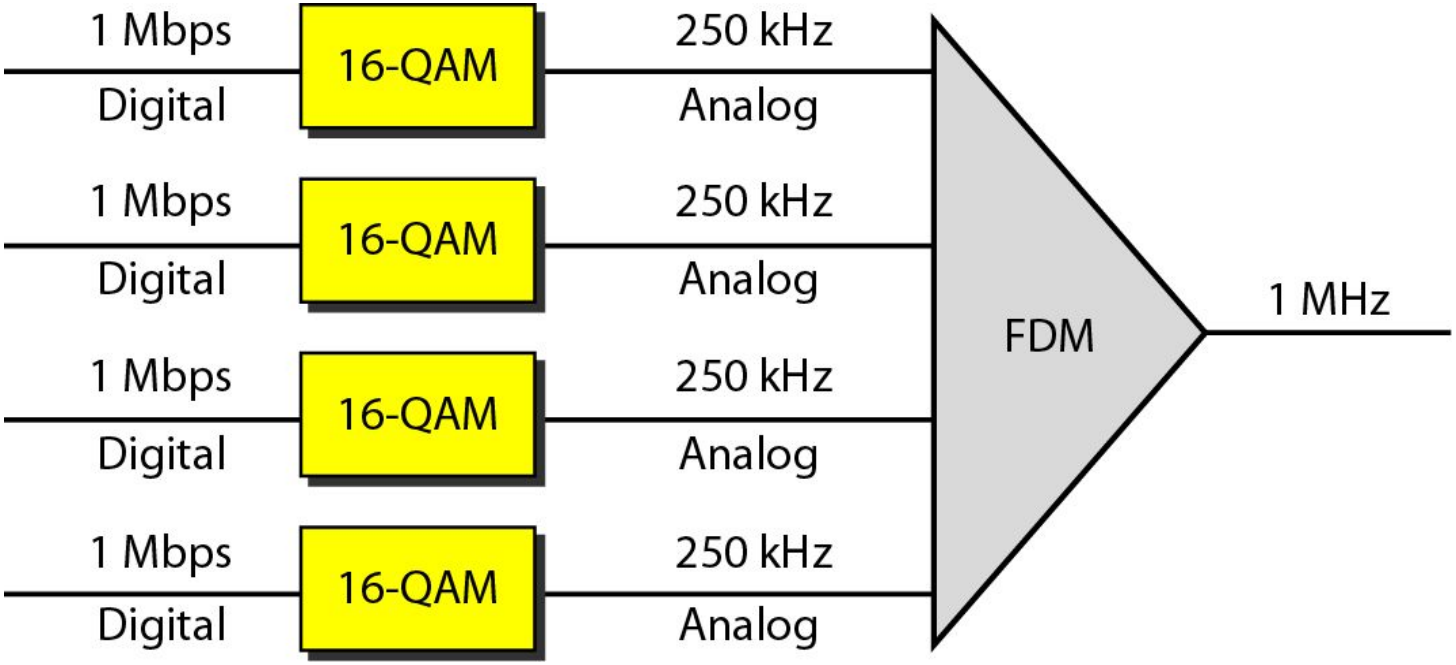

Figure 6.9 *Analog hierarchy*

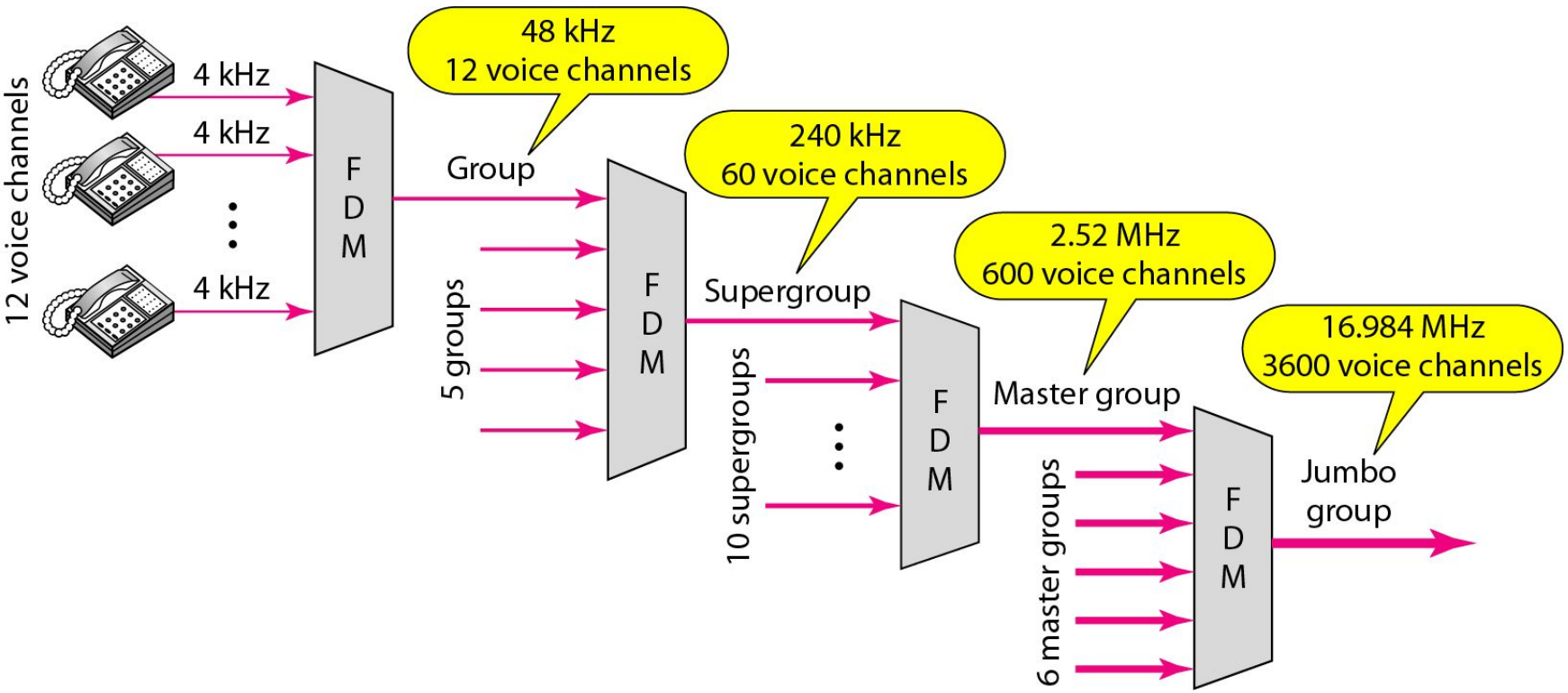

Analog Carrier Systems

- AT&T (USA)
- Hierarchy of FDM schemes
- Group
  - 12 voice channels (4kHz each) = 48kHz
  - Range 60kHz to 108kHz
- Supergroup
  - 60 channel
  - FDM of 5 group signals on carriers between 420kHz and 612 kHz
- Mastergroup
  - 10 supergroups

Example 6.4

The Advanced Mobile Phone System (AMPS) uses two bands. The first band of 824 to 849 MHz is used for sending, and 869 to 894 MHz is used for receiving. Each user has a bandwidth of 30 kHz in each direction. How many people can use their cellular phones simultaneously?

Solution

Each band is 25 MHz. If we divide 25 MHz by 30 kHz, we get 833.33. In reality, the band is divided into 832 channels. Of these, 42 channels are used for control, which means only 790 channels are available for cellular phone users.

Multicarrier Modulation i.e. OFDM

- OFDM, also called **multicarrier modulation**, uses multiple carrier signals at different frequencies, sending some of the bits on each channel. This is similar to FDM.
- However, in the case of OFDM, all of the subchannels are dedicated to a single data source.
- To complement OFDM, the specification supports the use of a variety of modulation and coding alternatives.
  - The system uses up to 48 subcarriers that are modulated using BPSK, QPSK, 16-QAM, or 64-QAM. Subcarrier frequency.
- There are various variants of OFDM :
  - f-OFDM (Flash OFDM), Hybrid-OFDM, OFDMA, COFDM, VOFDM, WOFDM etc.

Advantages and disadvantages of OFDM

- **advantages of OFDM data modulation:**
  - OFDM spectrum is composed of overlapped narrow subcarriers. This makes efficient usage of frequency spectrum compare to traditional FDM method.
  - OFDM resistive to frequency selective fading with narroband channels. Moreover OFDM transmit/receive chain uses channel encoder/decoder and interleaver/deinterlaver which help in recovering lost OFDM symbols due to fading.
  - OFDM makes use of cyclic prefix to eliminate ISI (Inter Symbol Interference) found in the multipath channel environment. Hence it is robust to multipath fading.
  - Channel estimation and equalization has been carried out using known pattern (i.e. preamble) and embedded pilot carriers in a symbol. This is more simpler and efficient compare to channel equalization used in SC (Single Carrier) system.
  - Time offset estimation and correction algorithms are very easy due to correlation technique.
  - It is possible to allocate bandwidth as per resource requirements. Hence OFDM is bandwidth scalable technique.

Advantages and disadvantages of OFDM

- **advantages of OFDM data modulation:**
  - OFDM is used to implement data modulation and demodulation by using computationally efficient FFT techniques.
  - Less sensitive to sampling time offset impairments compare to SC system.
  - Robust against narrow band co-channel interference.
  - OFDM receiver does not require tuned sub-channel filters unlike FDM.
  - Facilitates SFNs (Single Frequency Networks) i.e. transmit macro diversity.
- **Disadvantages of OFDM data modulation:**
  - OFDM signal has high PAPR (Peak to Average Power Ratio) due to its noise like amplitude having large dynamic range. Due to this, OFDM based transmission system requires RF PA (Power Amplifier) with higher PAPR.
  - OFDM is more sensitive to CFO (carrier frequency offset) than SC system. It has higher CFO due to different LOs (Local Oscillators) and DFT leakage. This requires complex frequency offset correction algorithms at the OFDM receiver.
  - It is prone to ISI (Inter Symbol Interference) and ICI (Inter Carrier Interference). This requires time offset and frequency offset correction algorithms.
  - As OFDM spectrum travels through multiple paths which require guard band to avoid ISI errors due to timing offsets. Use of cyclic prefix lead to loss of efficiency.
  - OFDM is sensitive to doppler shift.
  - OFDM requires linear transmitter circuitry, which suffers from poor power efficiency.

Figure 6.10 *Wavelength-division multiplexing (WDM)*

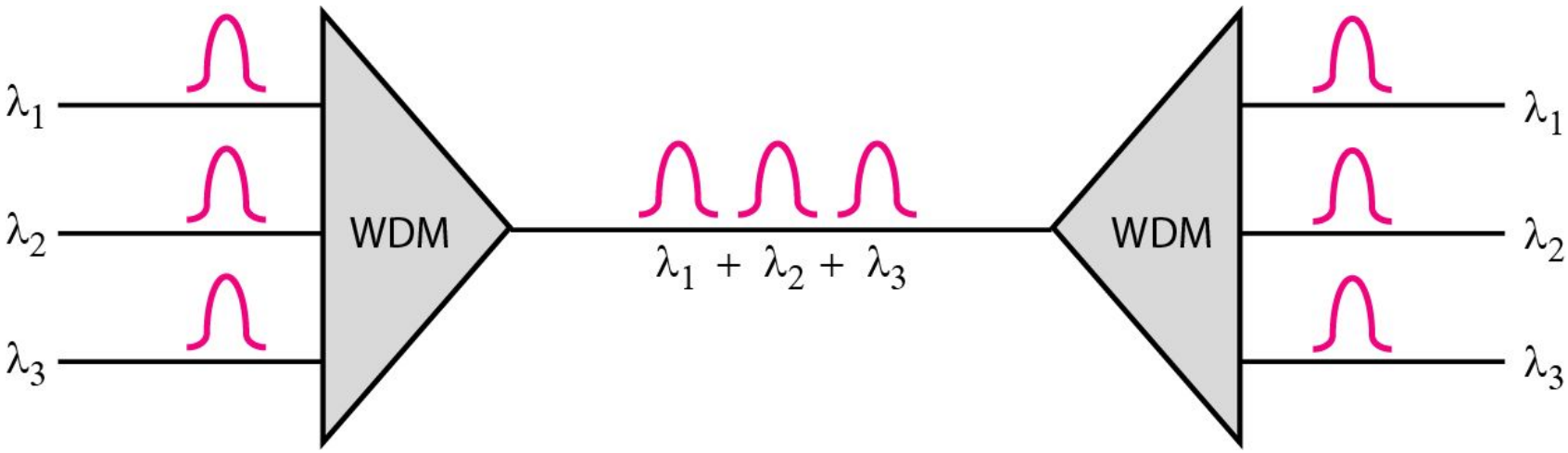

Note

WDM is an analog multiplexing technique to combine optical signals.

Wavelength Division Multiplexing (WDM)

- The true potential of optical fiber is fully exploited when multiple beams of light at different frequencies are transmitted on the same fiber. This is a form of frequency division multiplexing (FDM) but is commonly called **wavelength division multiplexing** (WDM).
- With WDM, the light streaming through the fiber consists of many colors, or wavelengths, each carrying a separate channel of data.
- A typical WDM system has the same general architecture as other FDM systems.

Figure 6.11 ***Prisms in wavelength-division multiplexing and demultiplexing***

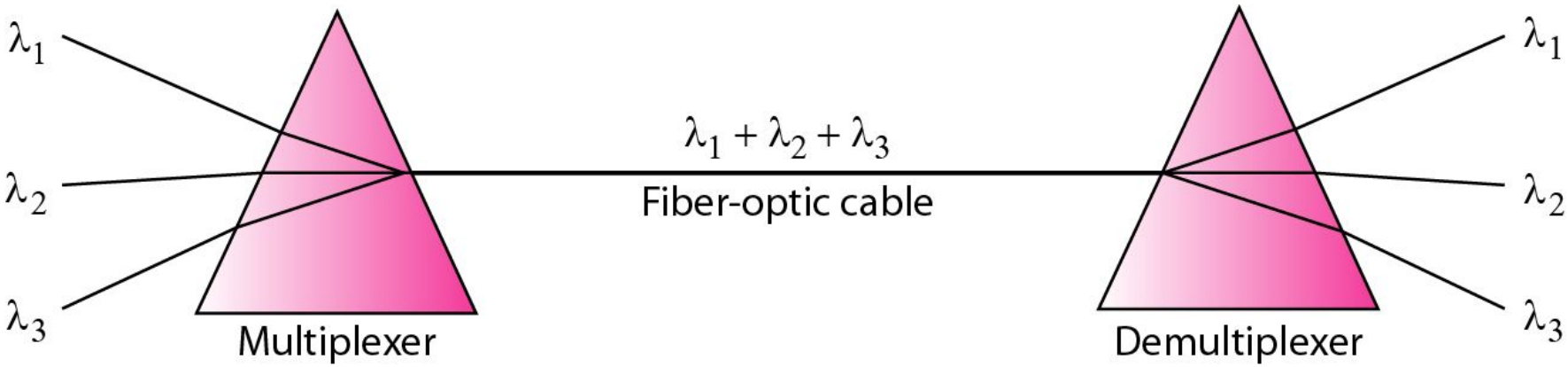

Figure 6.12 Time Division Multiplexing (*TDM*)

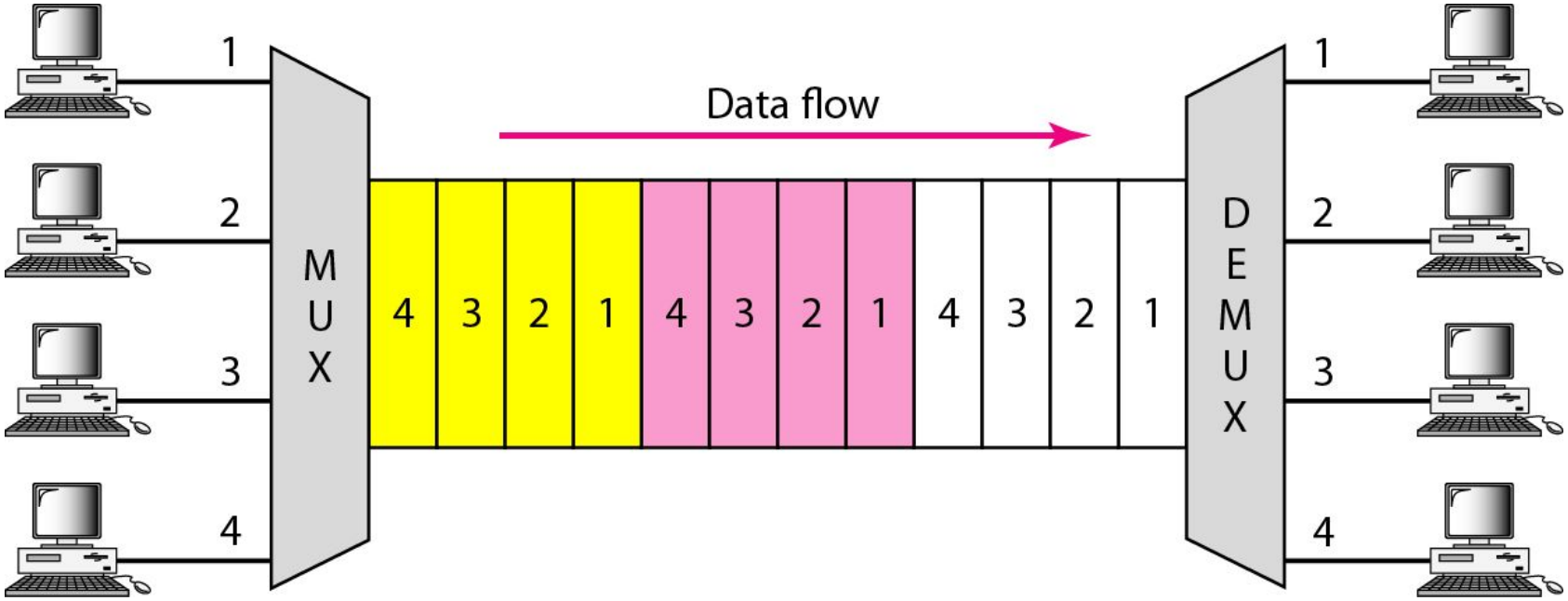

Note

TDM is a digital multiplexing technique for combining several low-rate digital channels into one high-rate one.

Synchronous Time Division Multiplexing

- Data rate of medium exceeds data rate of digital signal to be transmitted
- Multiple digital signals interleaved in time
- May be at bit level of blocks
- Time slots preassigned to sources and fixed
- Time slots allocated even if no data
- Time slots do not have to be evenly distributed amongst sources

Time Division Multiplexing (TDM)

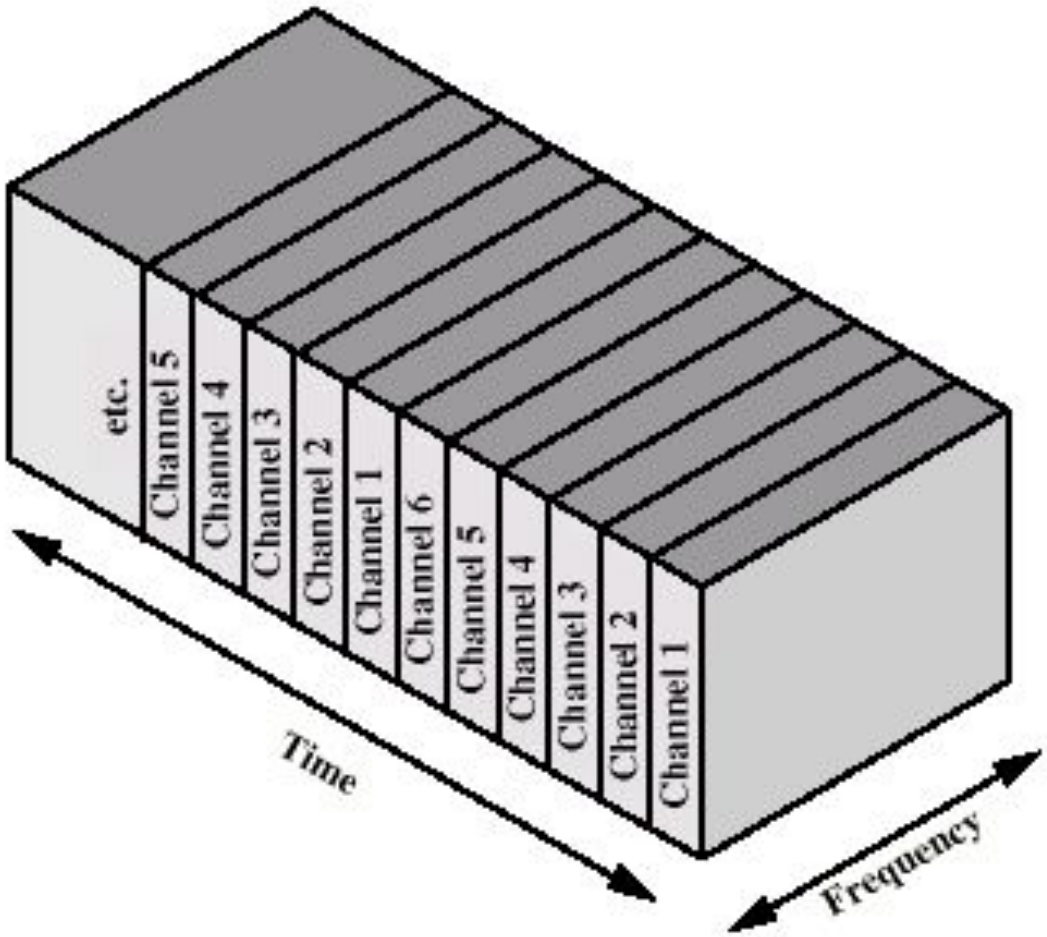

Figure 6.13 *Synchronous time-division multiplexing*

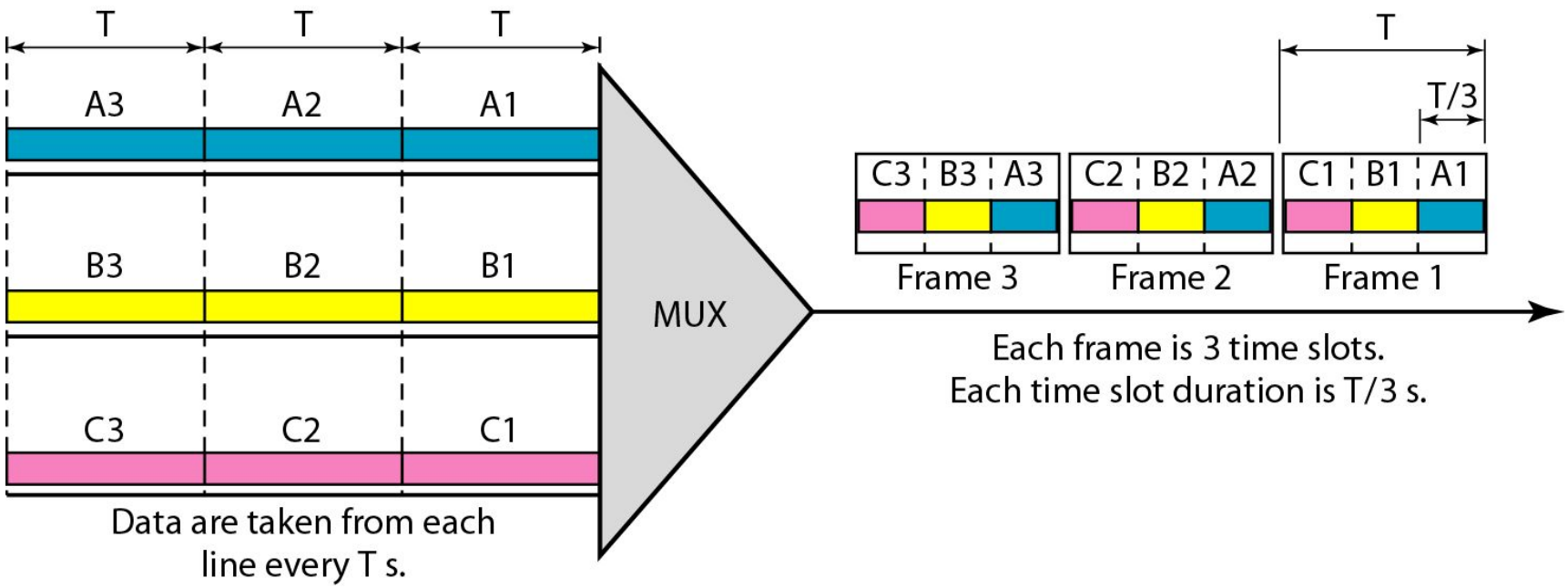

Note

In synchronous TDM, the data rate of the link is *n* times faster, and the unit duration is *n* times shorter.

Example 6.5

In Figure 6.13, the data rate for each one of the 3 input connection is 1 kbps. If 1 bit at a time is multiplexed (a unit is 1 bit), what is the duration of (a) each input slot, (b) each output slot, and (c) each frame?

Solution

We can answer the questions as follows:

a. The data rate of each input connection is 1 kbps. This means that the bit duration is 1/1000 s or 1 ms. The duration of the input time slot is 1 ms (same as bit duration).

Example 6.5 (continued)

b. ***The duration of each output time slot is one-third of the input time slot. This means that the duration of the output time slot is 1/3 ms.***

c. ***Each frame carries three output time slots. So the duration of a frame is 3 × 1/3 ms, or 1 ms.***

Note: The duration of a frame is the same as the duration of an input unit.

Figure 6.14 *Example 6.6*

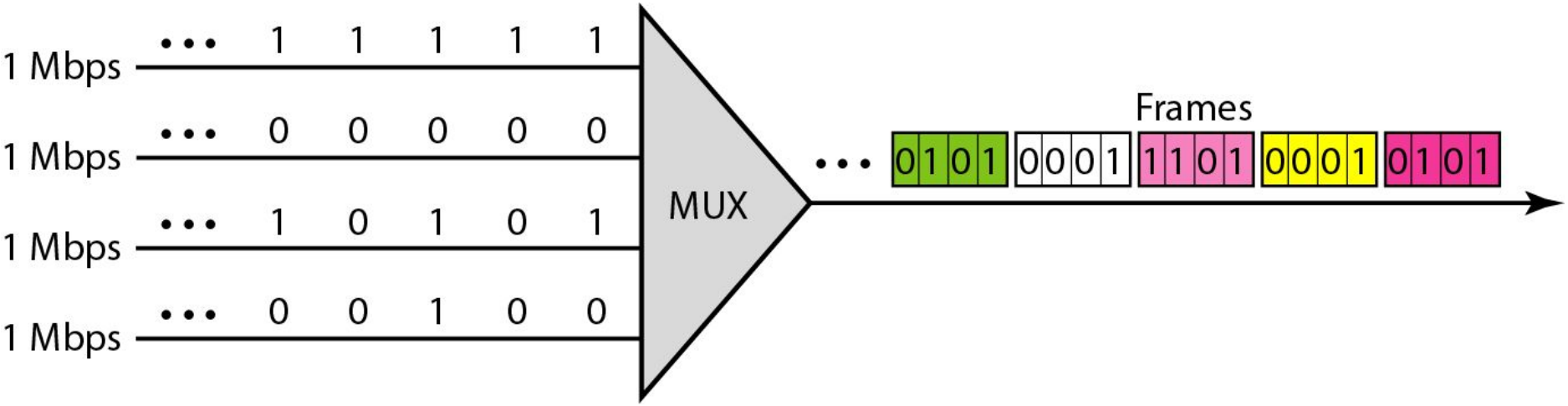

Example 6.6

Figure 6.14 shows synchronous TDM with 4 1Mbps data stream inputs and one data stream for the output. The unit of data is 1 bit. Find (a) the input bit duration, (b) the output bit duration, (c) the output bit rate, and (d) the output frame rate.

Solution

We can answer the questions as follows:

a. The input bit duration is the inverse of the bit rate: 1/1 Mbps = 1 μs.

b. The output bit duration is one-fourth of the input bit duration, or ¼ μs.

Example 6.6 (continued)

c. *The output bit rate is the inverse of the output bit duration or 1/(4μs) or 4 Mbps. This can also be deduced from the fact that the output rate is 4 times as fast as any input rate; so the output rate = 4 × 1 Mbps = 4 Mbps.*

d. *The frame rate is always the same as any input rate. So the frame rate is 1,000,000 frames per second. Because we are sending 4 bits in each frame, we can verify the result of the previous question by multiplying the frame rate by the number of bits per frame.*

Example 6.7

Four 1-kbps connections are multiplexed together. A unit is 1 bit. Find (a) the duration of 1 bit before multiplexing, (b) the transmission rate of the link, (c) the duration of a time slot, and (d) the duration of a frame.

Solution

We can answer the questions as follows:

a. The duration of 1 bit before multiplexing is 1 / 1 kbps, or 0.001 s (1 ms).

b. The rate of the link is 4 times the rate of a connection, or 4 kbps.

Example 6.7 (continued)

c. *The duration of each time slot is one-fourth of the duration of each bit before multiplexing, or 1/4 ms or 250 μs. Note that we can also calculate this from the data rate of the link, 4 kbps. The bit duration is the inverse of the data rate, or 1/4 kbps or 250 μs.*

d. *The duration of a frame is always the same as the duration of a unit before multiplexing, or 1 ms. We can also calculate this in another way. Each frame in this case has four time slots. So the duration of a frame is 4 times 250 μs, or 1 ms.*

Interleaving

- The process of taking a group of bits from each input line for multiplexing is called interleaving.
- We interleave bits (1 - n) from each input onto one output.

Figure 6.15 *Interleaving*

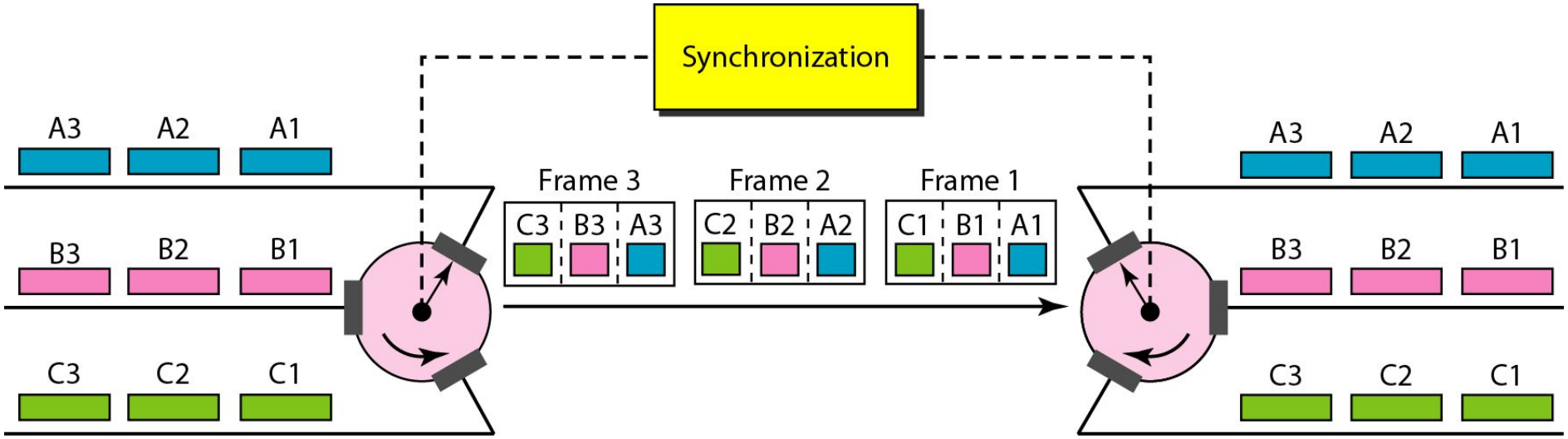

Example 6.8

Four channels are multiplexed using TDM. If each channel sends 100 bytes /s and we multiplex 1 byte per channel, show the frame traveling on the link, the size of the frame, the duration of a frame, the frame rate, and the bit rate for the link.

Solution

The multiplexer is shown in Figure 6.16. Each frame carries 1 byte from each channel; the size of each frame, therefore, is 4 bytes, or 32 bits. Because each channel is sending 100 bytes/s and a frame carries 1 byte from each channel, the frame rate must be 100 frames per second. The bit rate is 100 × 32, or 3200 bps.

Figure 6.16 *Example 6.8*

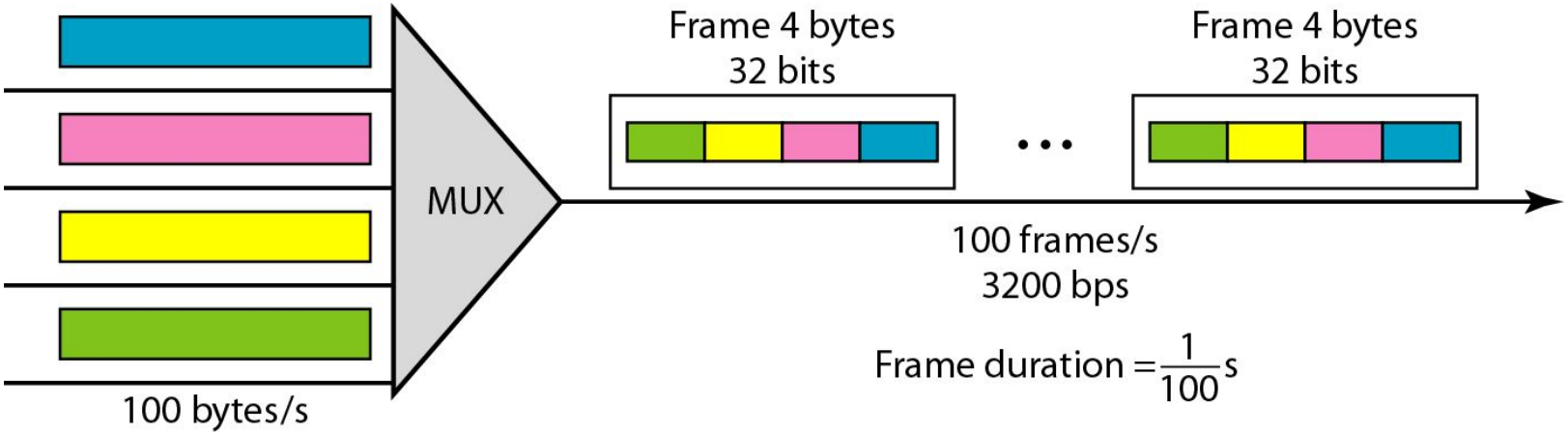

Example 6.9

A multiplexer combines four 100-kbps channels using a time slot of 2 bits. Show the output with four arbitrary inputs. What is the frame rate? What is the frame duration? What is the bit rate? What is the bit duration?

Solution

Figure 6.17 shows the output (4x100kbps) for four arbitrary inputs. The link carries 400K/(2x4)=50,000 2x4=8bit frames per second. The frame duration is therefore 1/50,000 s or 20 μs. The bit duration on the output link is 1/400,000 s, or 2.5 μs.

Figure 6.17 *Example 6.9*

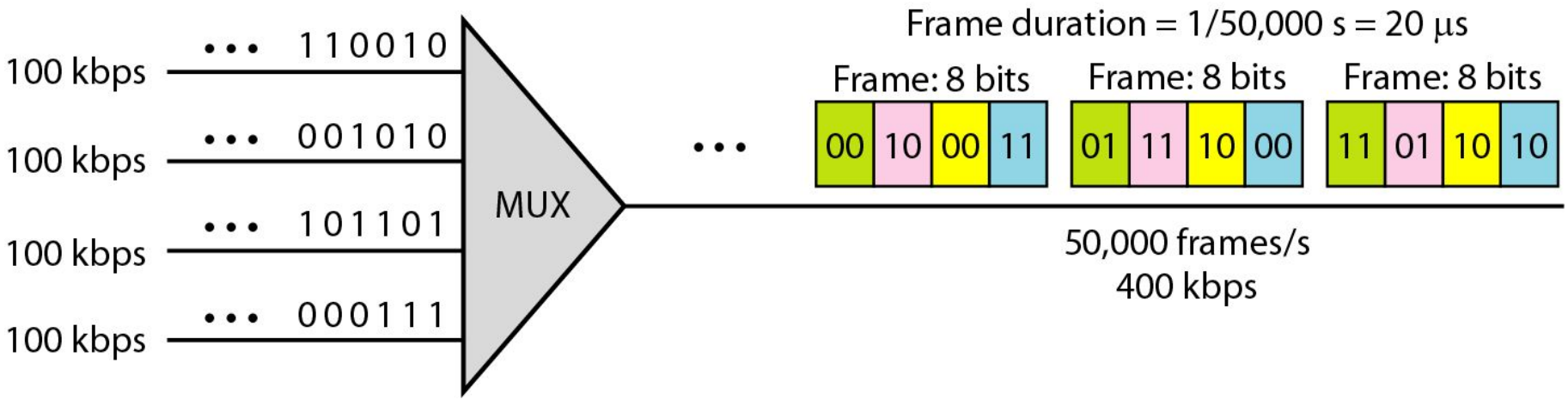

Data Rate Management

- Not all input links maybe have the same data rate.
- Some links maybe slower. There maybe several different input link speeds
- There are three strategies that can be used to overcome the data rate mismatch:
  - multilevel, multislot and pulse stuffing

Data rate matching

- Multilevel: used when the data rate of the input links are multiples of each other.
- Multislot: used when there is a GCD between the data rates. The higher bit rate channels are allocated more slots per frame, and the output frame rate is a multiple of each input link.
- Pulse Stuffing: used when there is no GCD between the links. The slowest speed link will be brought up to the speed of the other links by bit insertion, this is called pulse stuffing.

Pulse Stuffing

- Used in Pulse Coded Modulation (PCM)
- Problem - Synchronizing data sources
- Clocks in different sources drifting
- Data rates from different sources not related by simple rational number
- Solution - Pulse Stuffing
  - Outgoing data rate (excluding framing bits) higher than sum of incoming rates
  - Stuff extra dummy bits or pulses into each incoming signal until it matches local clock
  - Stuffed pulses inserted at fixed locations in frame and removed at demultiplexer

Figure 6.19 *Multilevel multiplexing*

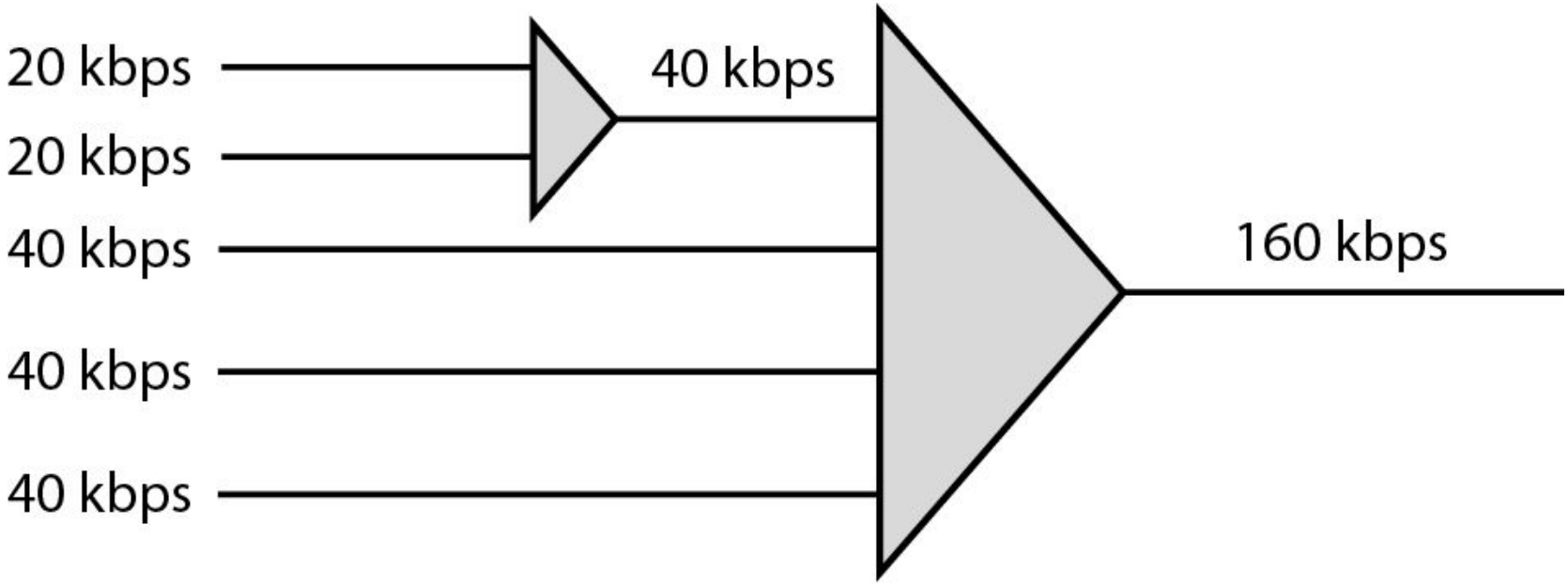

Figure 6.20 *Multiple-slot multiplexing*

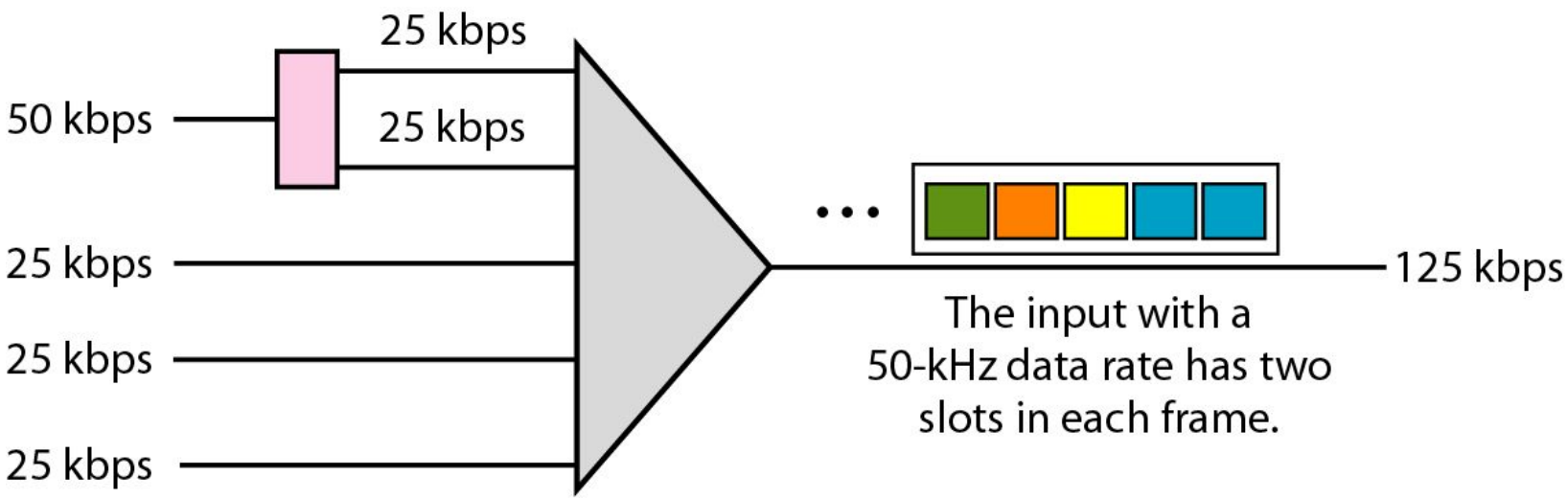

Figure 6.21 *Pulse stuffing*

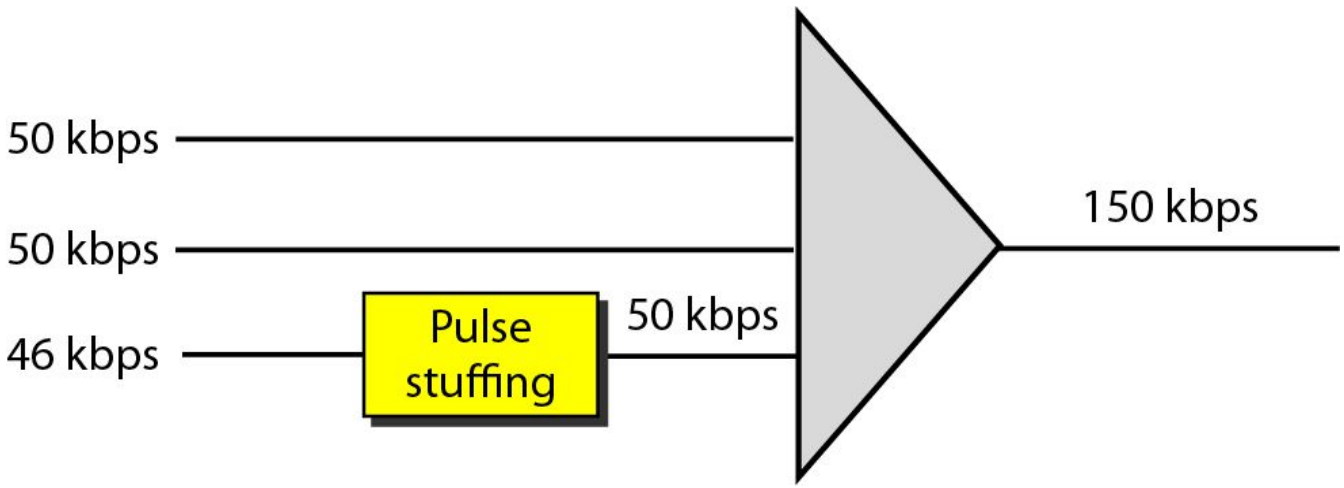

Synchronization

- To ensure that the receiver correctly reads the incoming bits, i.e., knows the incoming bit boundaries to interpret a “1” and a “0”, a known bit pattern is used between the frames.
- The receiver looks for the anticipated bit and starts counting bits till the end of the frame.
- Then it starts over again with the reception of another known bit.
- These bits (or bit patterns) are called synchronization bit(s).
- They are part of the overhead of transmission.

Framing

- No flag or SYNC characters bracketing TDM frames
- Must provide synchronizing mechanism
- Added digit framing
  - One control bit added to each TDM frame
    - Looks like another channel - “control channel”
  - Identifiable bit pattern used on control channel
    - e.g. alternating 01010101…unlikely on a data channel
  - Can compare incoming bit patterns on each channel with sync pattern

Figure 6.22 *Framing bits*

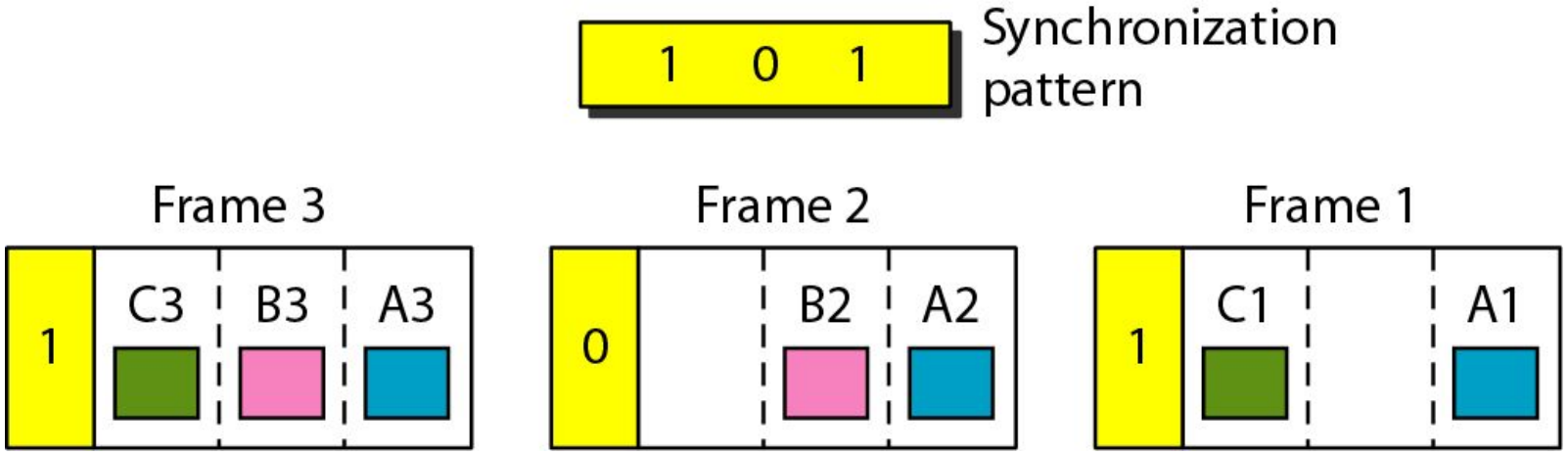

Example 6.10

We have four sources, each creating 250 8-bit characters per second. If the interleaved unit is a character and 1 synchronizing bit is added to each frame, find (a) the data rate of each source, (b) the duration of each character in each source, (c) the frame rate, (d) the duration of each frame, (e) the number of bits in each frame, and (f) the data rate of the link.

Solution

We can answer the questions as follows:

a. *The data rate of each source is 250 × 8 = 2000 bps = 2 kbps.*

Example 6.10 (continued)

b. *Each source sends 250 characters per second; therefore, the duration of a character is 1/250 s, or 4 ms.*

c. *Each frame has one character from each source, which means the link needs to send 250 frames per second to keep the transmission rate of each source.*

d. *The duration of each frame is 1/250 s, or 4 ms. Note that the duration of each frame is the same as the duration of each character coming from each source.*

e. *Each frame carries 4 characters and 1 extra synchronizing bit. This means that each frame is* $4 \times 8 + 1 = 33$ *bits.*

Example 6.11

Two channels, one with a bit rate of 100 kbps and another with a bit rate of 200 kbps, are to be multiplexed. How this can be achieved? What is the frame rate? What is the frame duration? What is the bit rate of the link?

Solution

We can allocate one slot to the first channel and two slots to the second channel. Each frame carries 3 bits. The frame rate is 100,000 frames per second because it carries 1 bit from the first channel. The bit rate is 100,000 frames/s × 3 bits per frame, or 300 kbps.

Digital Carrier Systems

- Hierarchy of TDM

- USA/Canada/Japan use one system
- ITU-T use a similar (but different) system
- US system based on DS-1 format
- **Multiplexes 24 channels**
- Each frame has 8 bits per channel plus one framing bit
- 193 bits per frame
- Uses T carrier and E carrier system interface

Digital Carrier Systems (2)

- For voice each channel contains one word of digitized data (PCM, 8000 samples per sec)
  - Data rate 8000x193 = 1.544Mbps
  - Five out of six frames have 8 bit PCM samples
  - Sixth frame is 7 bit PCM word plus signaling bit
  - Signaling bits form stream for each channel containing control and routing info
- Same format for digital data
  - 23 channels of data
    - 7 bits per frame plus indicator bit for data or systems control
  - 24th channel is sync

Mixed Data

- DS-1 can carry **mixed voice** and **data signals**
- 24 channels used
- No sync byte
- Can also interleave DS-1 channels
  - Ds-2 is four DS-1 giving 6.312Mbps

Figure 6.23 *Digital hierarchy*

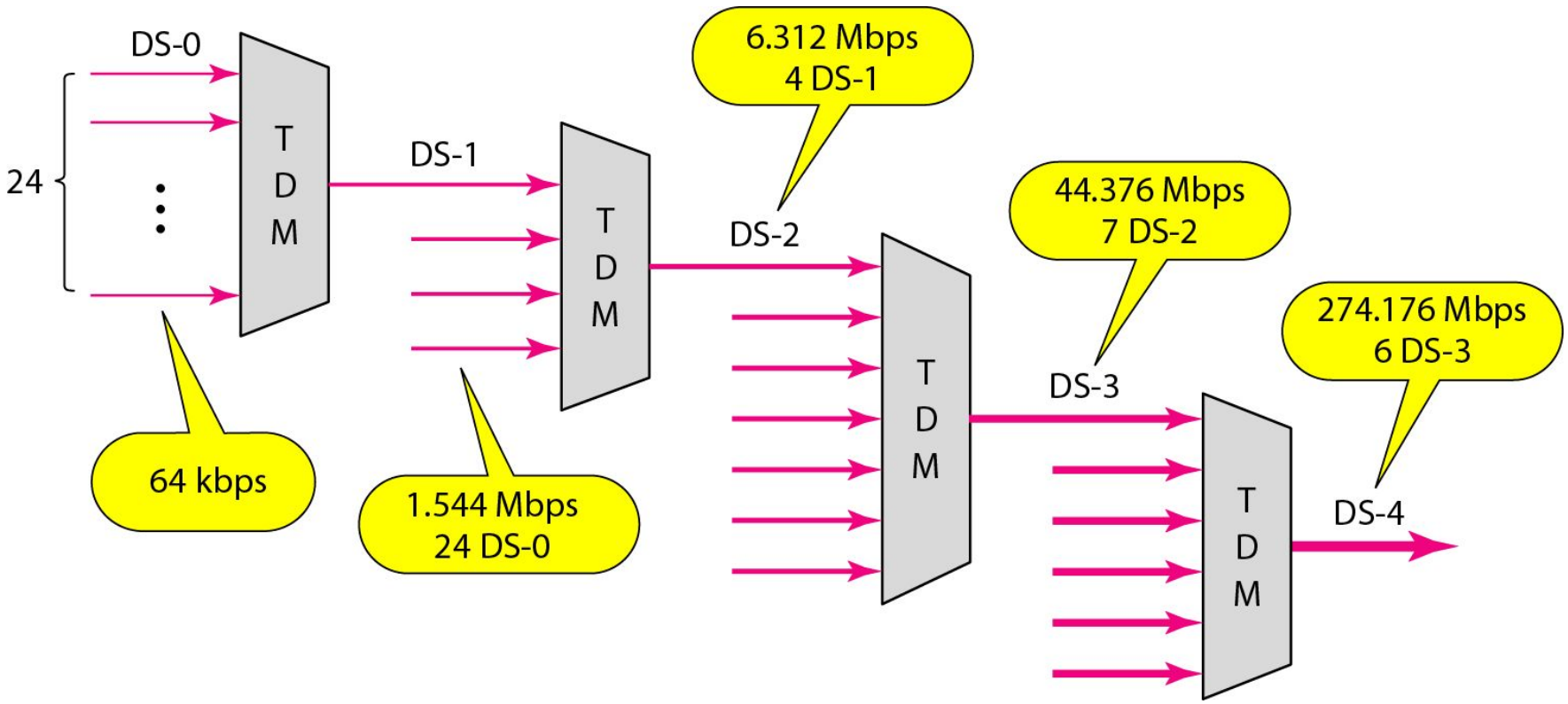

Table 6.1 ***DS and T line rates***

Service	*Line*	*Rate (Mbps)*	*Voice Channels*
DS-1	T-1	1.544	24
DS-2	T-2	6.312	96
DS-3	T-3	44.736	672
DS-4	T-4	274.176	4032

Figure 6.24 *T-1 line for multiplexing telephone lines*

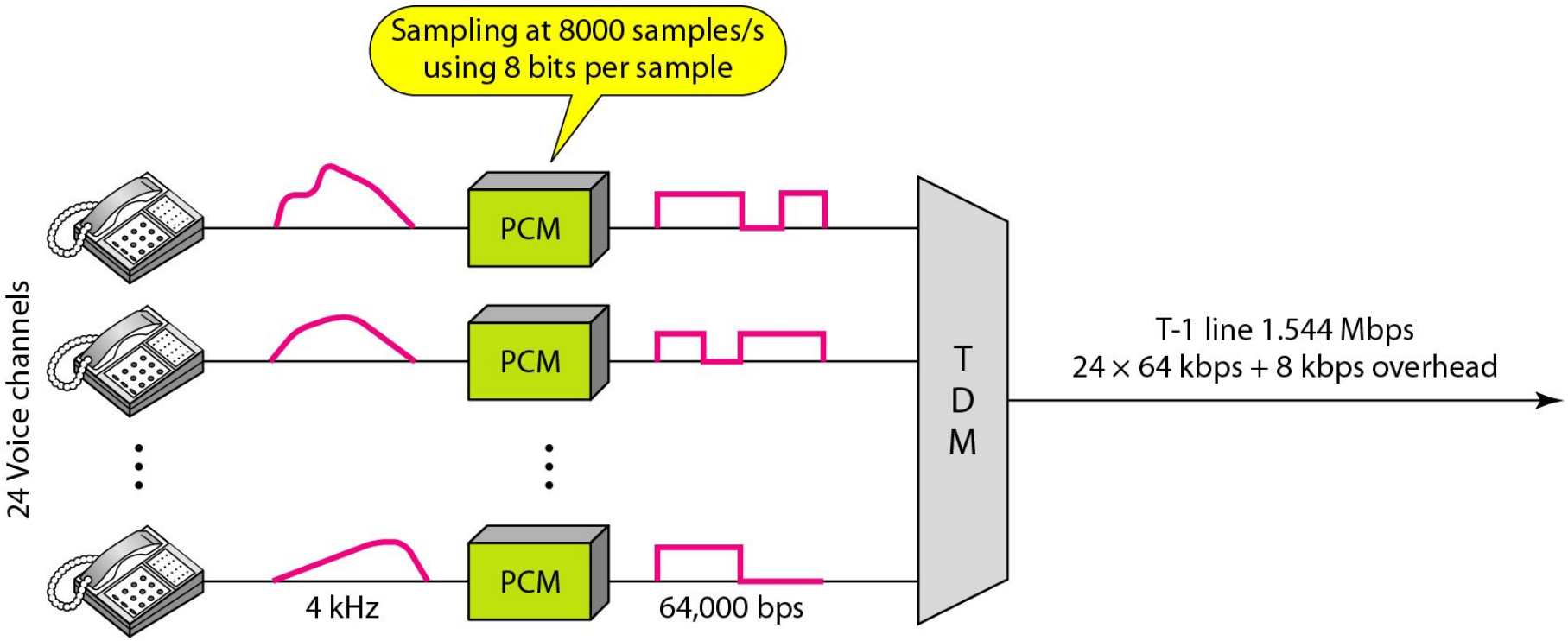

Figure 6.25 *T-1 frame structure*

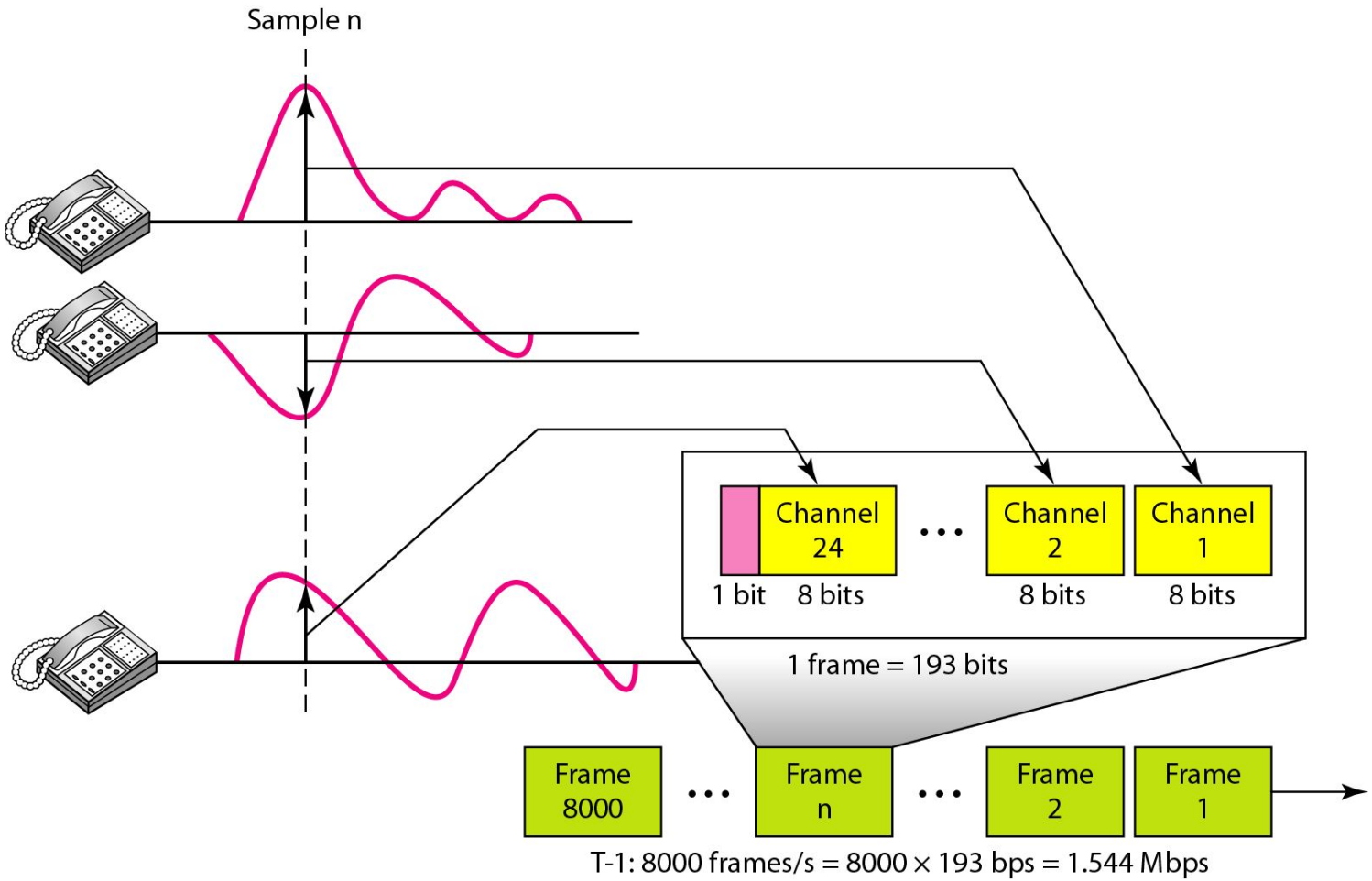

Table 6.2 ***E line rates***

Line	*Rate (Mbps)*	*Voice Channels*
E-1	2.048	30
E-2	8.448	120
E-3	34.368	480
E-4	139.264	1920

Inefficient use of Bandwidth

- Sometimes an input link may have no data to transmit.
- When that happens, one or more slots on the output link will go unused.
- That is wasteful of bandwidth.

Figure 6.18 *Empty slots*

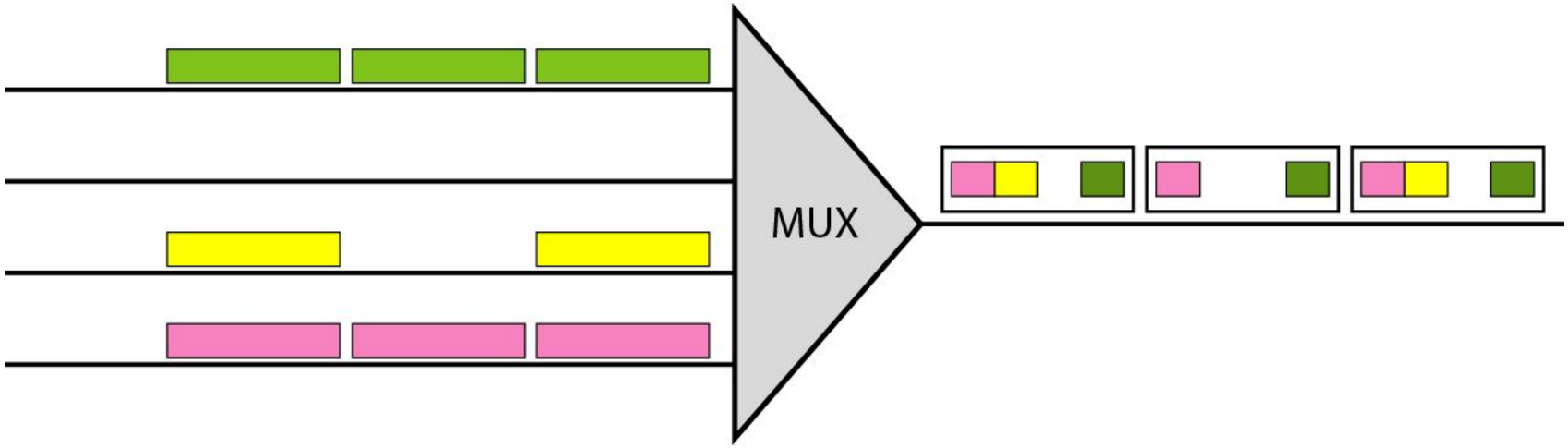

Figure 6.26 *TDM slot comparison*

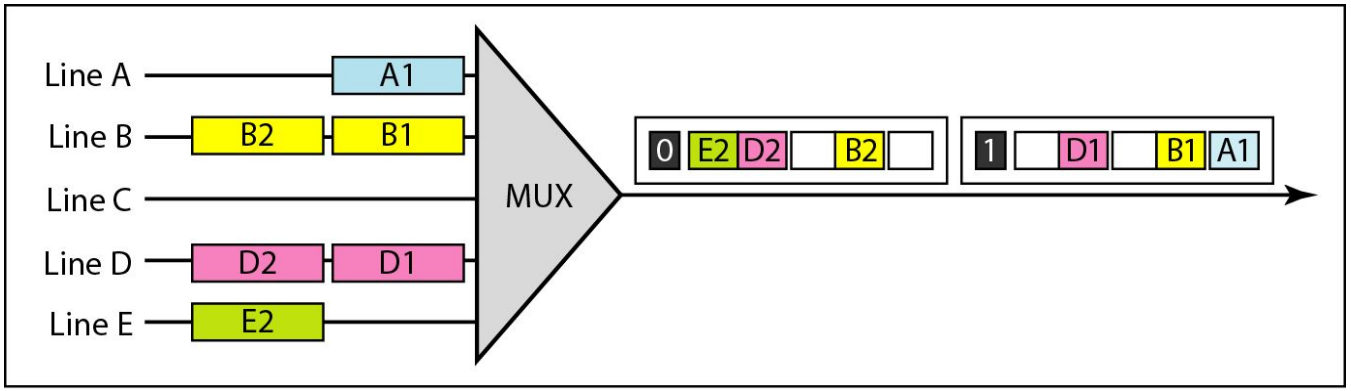

a. Synchronous TDM

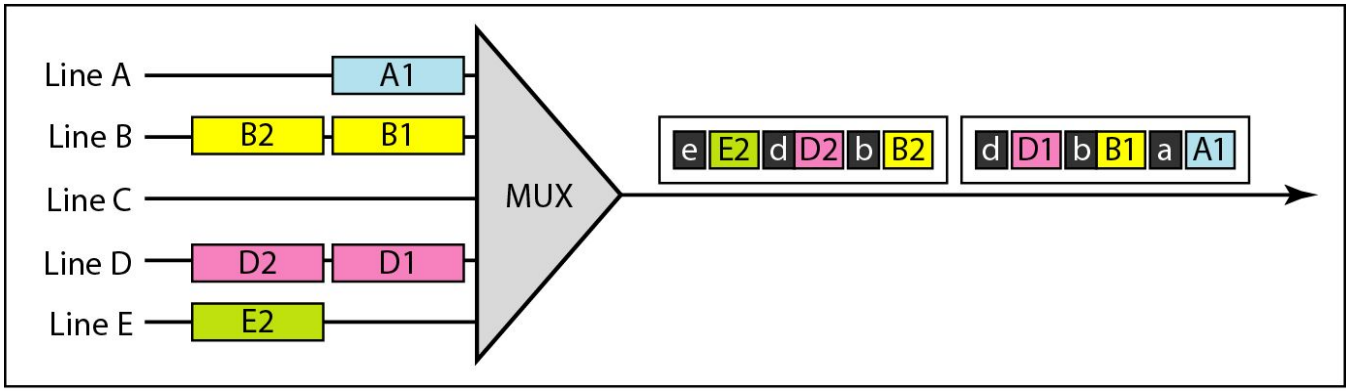

b. Statistical TDM

TDM Link Control

- No headers and trailers
- Data link control protocols not needed
- Flow control
  - Data rate of multiplexed line is fixed
  - If one channel receiver can not receive data, the others must carry on
  - The corresponding source must be quenched
  - This leaves empty slots
- Error control
  - Errors are detected and handled by individual channel systems
- Flow control and error control is done per channel basis using HDLC on channels.

Data Link Control on TDM

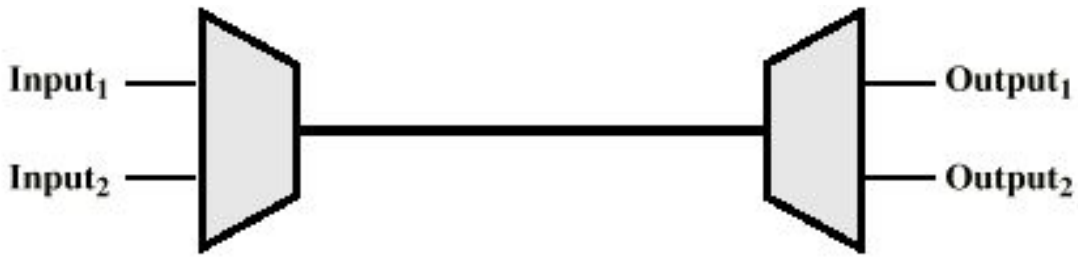

(a) Configuration

Input$_1$ • • • • • • • • • • • F_1 f_1 f_1 d_1 d_1 d_1 C_1 A_1 F_1 f_1 f_1 d_1 d_1 d_1 C_1 A_1 F_1

Input$_2$ • • • F_2 f_2 f_2 d_2 d_2 d_2 d_2 C_2 A_2 F_2 f_2 f_2 d_2 d_2 d_2 d_2 C_2 A_2 F_2

(b) Input data streams

• • • f_2 F_1 d_2 f_1 d_2 f_1 d_2 d_1 d_2 d_1 C_2 d_1 A_2 C_1 F_2 A_1 f_2 F_1 f_2 f_1 d_2 f_1 d_2 d_1 d_2 d_1 d_2 d_1 C_2 C_1 A_2 A_1 F_2 F_1

(c) Multiplexed data stream

Legend: F = flag field; A = address field; C = control field; d = one octet of data field; f = one octet of FCS field

The octets of the HDLC frames from the two sources are shuffled together for transmission over the multiplexed line.

Statistical TDM

- In a synchronous time division multiplexer,
  - **many of the time slots in a frame are wasted.**
  - Application of a synchronous TDM involves linking a number of terminals to a shared computer port. Even if all terminals are actively in use, **most of the time there is no data transfer** at any particular terminal.
- An alternative to synchronous TDM is **statistical TDM.**
- The statistical multiplexer exploits this common property of **data transmission by dynamically allocating time slots on demand.**
- As with a synchronous TDM, the statistical multiplexer has a number of I/O lines on one side and a higher-speed multiplexed line on the other.

Statistical TDM

- Statistical TDM allocates time slots dynamically based on demand
- Multiplexer scans input lines and collects data until frame full
- Data rate on line lower than aggregate rates of input lines

Statistical TDM

- If a statistical multiplexer and a synchronous multiplexer both use a link of the same data rate, the statistical multiplexer can support more devices.
- Because statistical TDM takes advantage of the fact that the attached devices are not all transmitting all of the time, the data rate on the multiplexed line is less than the sum of the data rates of the attached devices.
- Thus, a statistical multiplexer can use a lower data rate to support as many devices as a synchronous multiplexer.

Statistical TDM Frame Formats

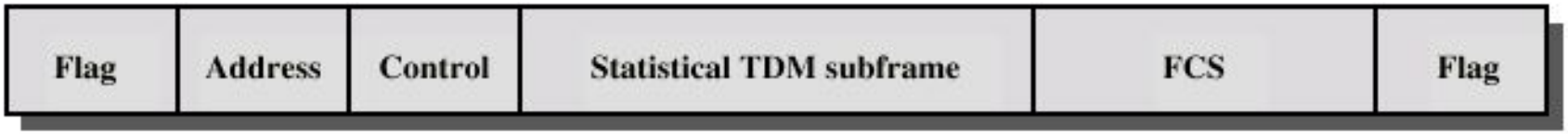

(a) Overall frame

(b) Subframe with one source per frame

(c) Subframe with multiple sources per frame

Performance

- Output data rate less than aggregate input rates
- May cause problems during peak periods
  - Buffer inputs
  - Keep buffer size to minimum to reduce delay

Buffer Size and Delay

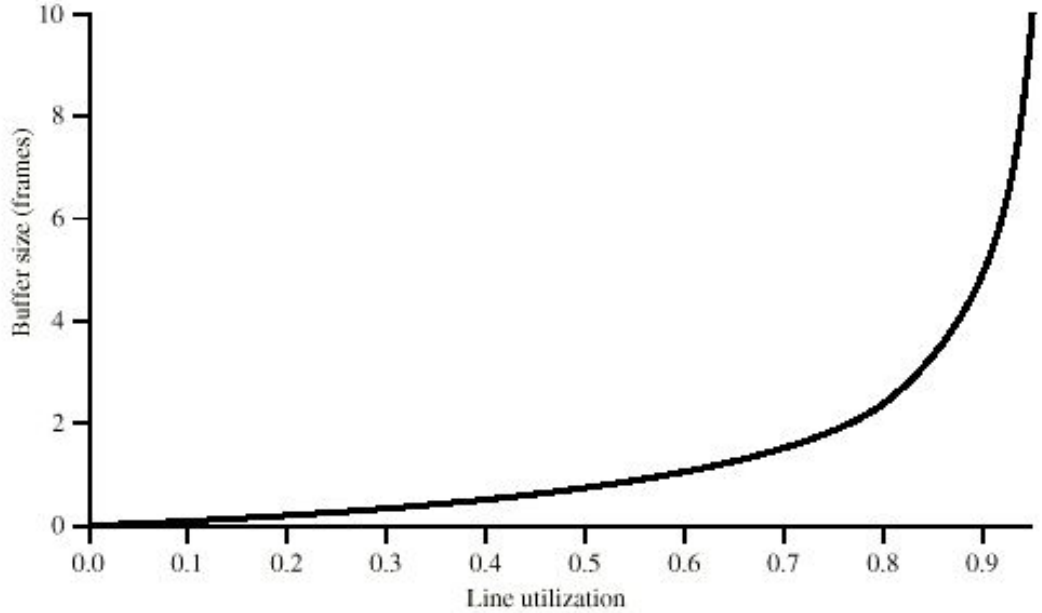

(a) Mean buffer size versus utilization

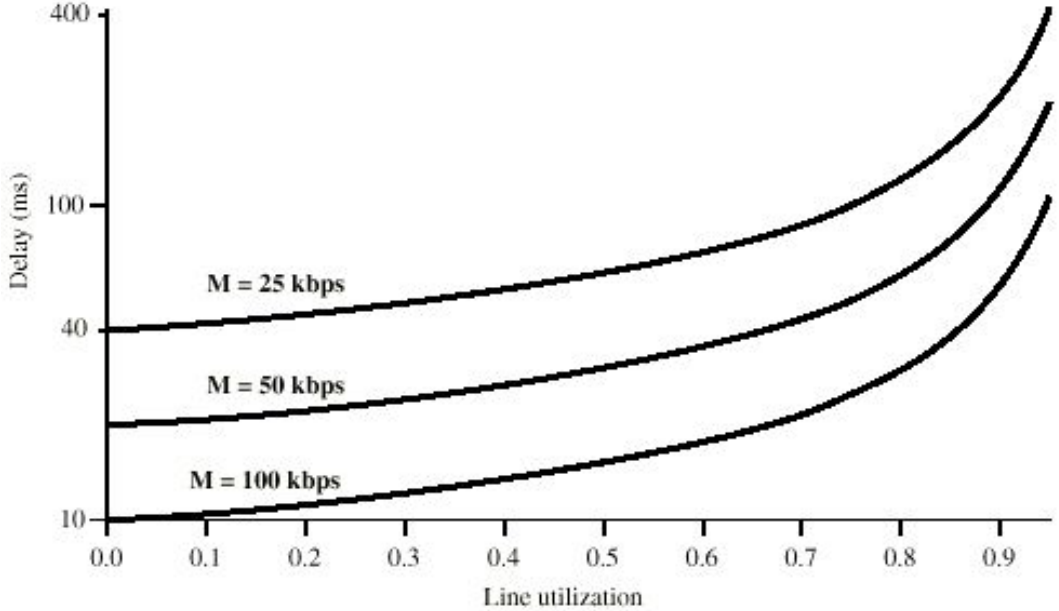

(a) Mean delay versus utilization

Data Communications and Networking Fourth Edition

Forouzan

Chapter 6

Bandwidth Utilization: Multiplexing and Spreading

Copyright © The McGraw-Hill Companies, Inc. Permission required for reproduction or display.